GPT044N04LNA

40V N-Channel MOSFET

Product Summary

$V_{(BR)DSS}$	$R_{DS(on)TYP}$	I_D
40V	3.6mΩ@10V	60A
	5.3mΩ@4.5V	

PDFN3.3X3.3-8L

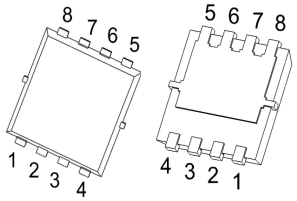

Schematic diagram

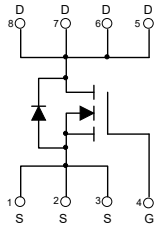

Feature

- Split Gate Trench Technology
- Low $R_{DS(ON)}$
- Low Gate Charge
- Low Gate Resistance
- 100% UIS Tested

Application

- Power Management
- Load Switching

Package Marking and Ordering Information

Part Number	Package	Marking	Packing	Reel Size	Tape Width	Qty
GPT044N04LNA	PDFN3.3X3.3-8L	T044N04L	Reel & Tape	330mm	12mm	5000pcs

ABSOLUTE MAXIMUM RATINGS (T_A = 25°C unless otherwise noted)

Parameter		Symbol	Value	Unit
Drain-Source Voltage		V_{DS}	40	V
Gate-Source Voltage		V_{GS}	±20	V
Continuous Drain Current[1]	T_C = 25°C	I_D	60	A
	T_C = 100°C		38	
Pulsed Drain Current[2]		I_{DM}	240	A
Single Pulsed Avalanche Current[3]		I_{AS}	18	A
Single Pulsed Avalanche Energy[3]		E_{AS}	81	mJ
Power Dissipation[5]	T_C = 25°C	P_D	30	W
Thermal Resistance from Junction to Ambient[6]		$R_{\theta JA}$	62	°C/W
Thermal Resistance from Junction to Case		$R_{\theta JC}$	4.1	°C/W
Operating Junction and Storage Temperature Range		T_J, T_{STG}	-55~ +150	°C

MOSFET ELECTRICAL CHARACTERISTICS (T_A = 25°C unless otherwise noted)

Parameter	Symbol	Test Condition	Min	Type	Max	Unit
Off Characteristics						
Drain-Source Breakdown Voltage	$V_{(BR)DSS}$	V_{GS} = 0V, I_D = 250μA	40			V
Zero Gate Voltage Drain Current	I_{DSS}	V_{DS} = 40V, V_{GS} = 0V			1	μA
Gate-Body Leakage Current	I_{GSS}	V_{GS} = ±20V, V_{DS} = 0V			±100	nA
On Characteristics[4]						
Gate Threshold Voltage	$V_{GS(th)}$	V_{DS} = V_{GS}, I_D = 250μA	1	1.5	2.2	V
Drain-Source On-Resistance	$R_{DS(on)}$	V_{GS} = 10V, I_D = 20A		3.6	5.2	mΩ
		V_{GS} = 4.5V, I_D = 15A		5.3	7.0	
Dynamic Characteristics						
Input Capacitance	C_{iss}	V_{DS} = 20V, V_{GS} = 0V, f = 1MHz		900		pF
Output Capacitance	C_{oss}			733		
Reverse Transfer Capacitance	C_{rss}			20		
Gate Resistance	R_g	V_{DS} = 0V, V_{GS} = 0V, f = 1MHz		4.6		Ω
Switching Characteristics						
Total Gate Charge	Q_g	V_{DS} = 20V, V_{GS} = 10V, I_D = 10A		16		nC
Gate-Source Charge	Q_{gs}			2.5		
Gate-Drain Charge	Q_{gd}			3.3		
Turn-On Delay Time	$t_{d(on)}$	V_{DD} = 20V, V_{GS} = 10V, R_G = 3Ω, I_A = 20A		9		ns
Turn-On Rise Time	t_r			5		
Turn-Off Delay Time	$t_{d(off)}$			20		
Turn-Off Fall Time	t_f			5.5		
Source-Drain Diode Characteristics						
Diode Forward Voltage[4]	V_{SD}	V_{GS} = 0V, I_S = 10A			1.2	V
Diode Continuous Forward Current[1]	I_S	T_C = 25°C			60	A
Diode Pulse Forward Current[2]	I_{SM}				240	A
Diode Reverse Recovery Time	t_{rr}	I_F = 10A, dI/dt = 100A/μs		12		ns
Diode Reverse Recovery Charge	Q_{rr}			22		nC

Notes:

1.The maximum current rating is limited by package. And device mounted on a large heatsink.

2.Pulse Test: Pulse Width ≤ 10μs, duty cycle ≤ 1%.

3.E_{AS} condition: V_{DD} = 40V, V_{GS} = 10V, L = 0.5mH, R_G = 25Ω Starting T_J = 25°C.

4.Pulse Test: Pulse Width ≤ 300μs, duty cycle ≤ 2%.

5.The power dissipation P_D is limited by $T_{J(MAX)}$ = 150°C. And device mounted on a large heatsink.

6.Device mounted on 1in^2 FR-4 board with 2oz. Copper, in a still air environment with T_A = 25°C.

Typical Characteristics

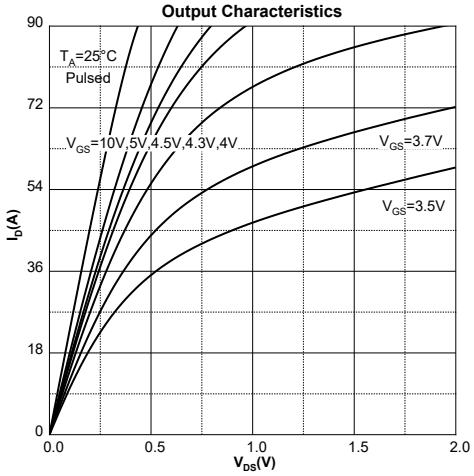

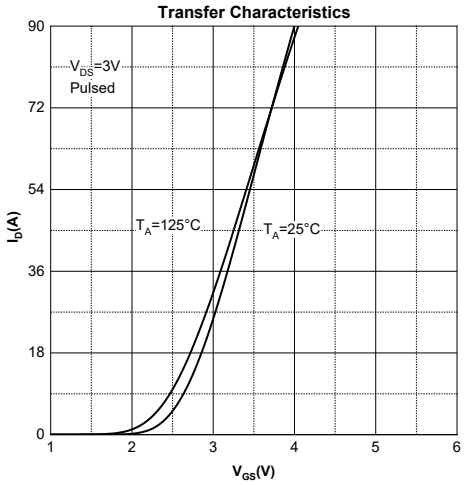

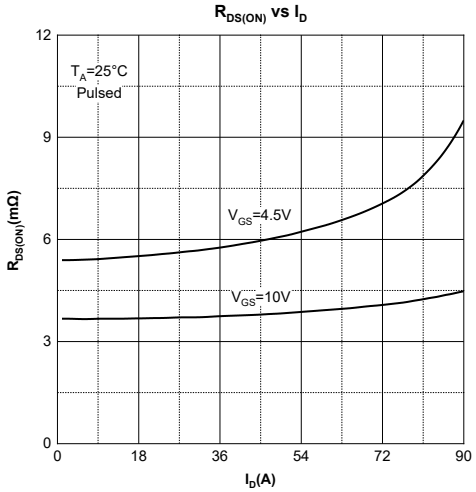

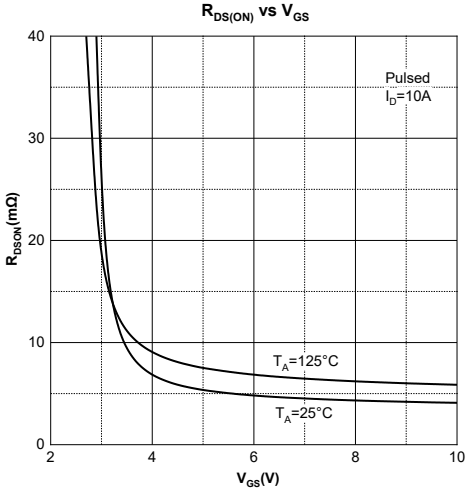

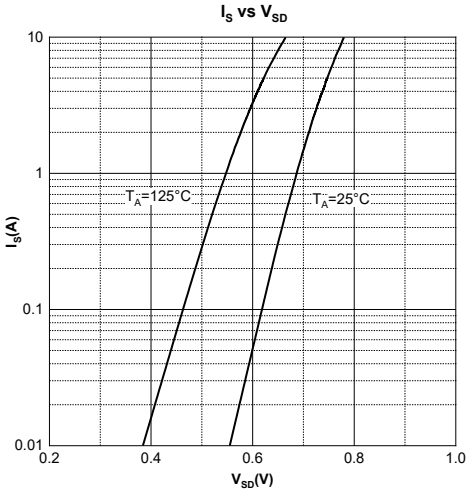

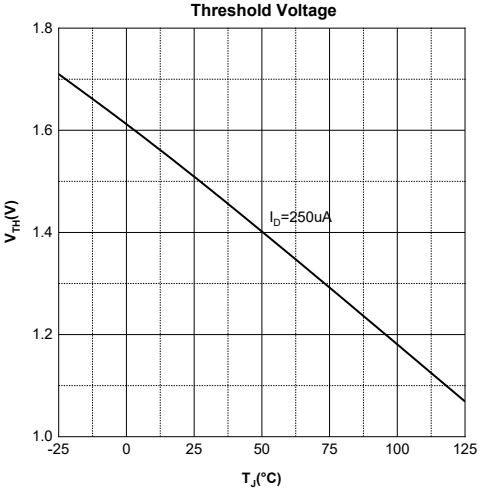

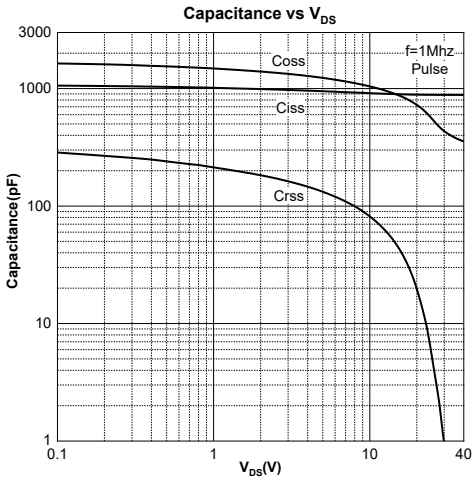
Capacitance vs V_{DS}
Coss
Ciss
Crss
f=1Mhz
Pulse
Capacitance(pF)
V_{DS}(V)

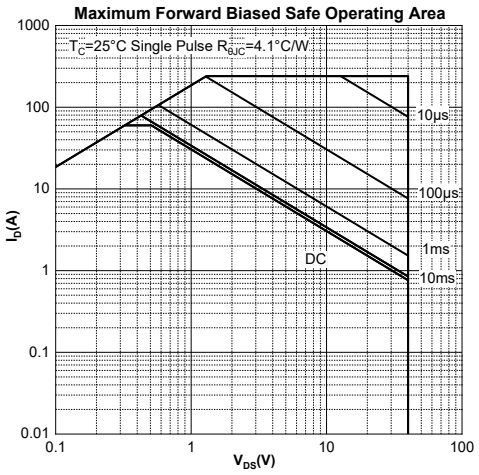
Maximum Forward Biased Safe Operating Area
T_C=25°C Single Pulse $R_{\theta JC}$=4.1°C/W
10μs
100μs
1ms
10ms
DC
I_D(A)
V_{DS}(V)

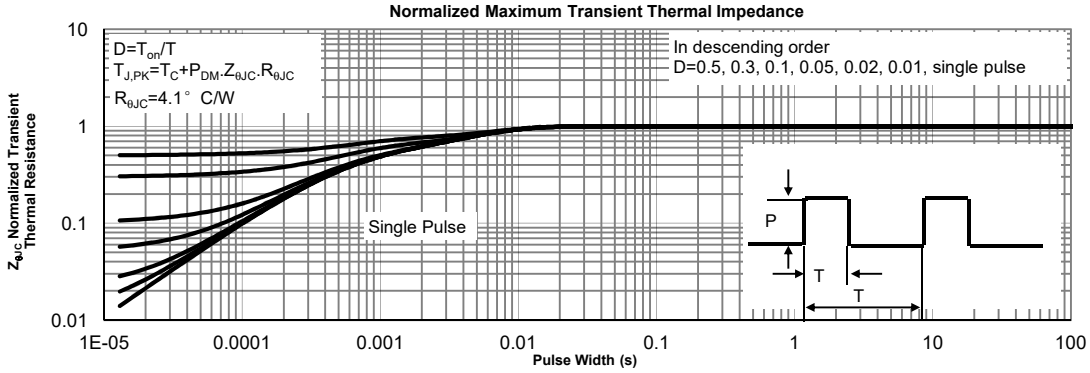
Normalized Maximum Transient Thermal Impedance
D=T_{on}/T
$T_{J,PK}$=T_C+P_{DM}.$Z_{\theta JC}$.$R_{\theta JC}$
$R_{\theta JC}$=4.1° C/W
In descending order
D=0.5, 0.3, 0.1, 0.05, 0.02, 0.01, single pulse
Single Pulse
P
T
T
$Z_{\theta JC}$ Normalized Transient Thermal Resistance
Pulse Width (s)

Test Circuit

Gate Charge Test Circuit & Waveform

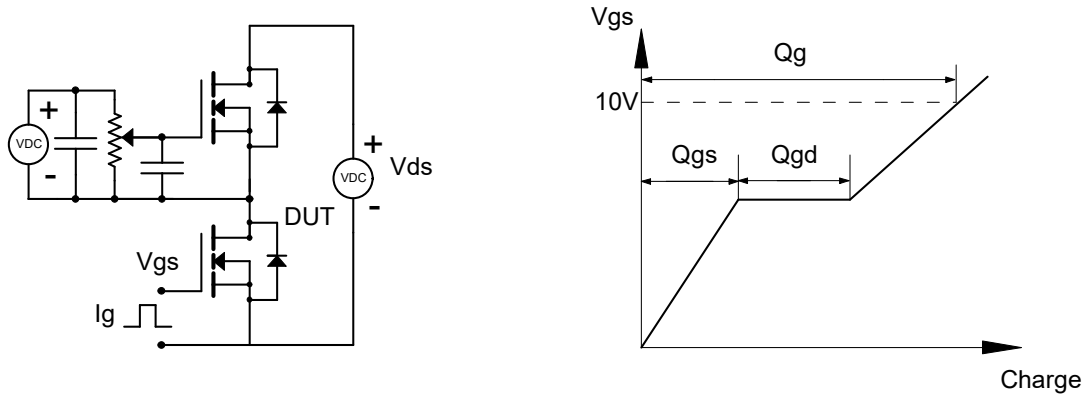

Resistive Switching Test Circuit & Waveform

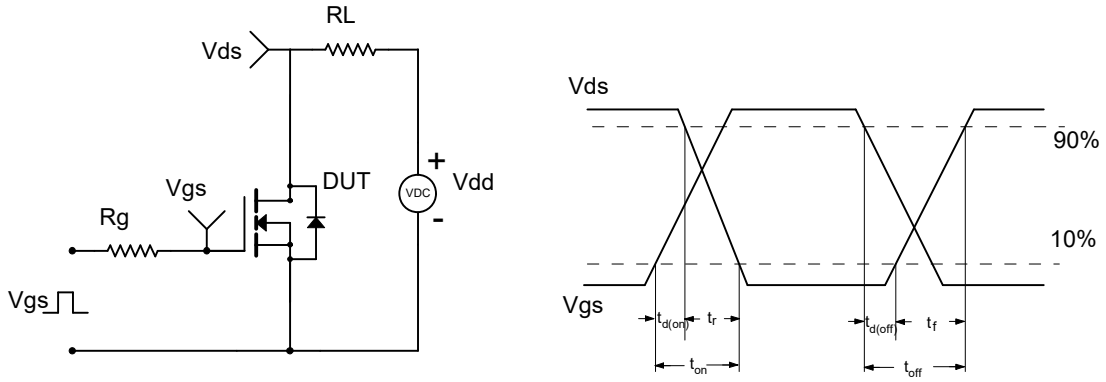

Unclamped Inductive Switching (UIS) Test Circuit & Waveforms

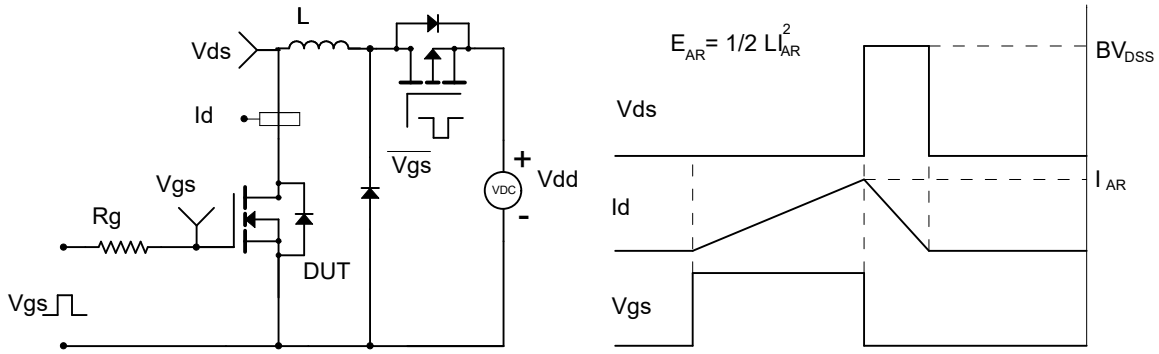

PDFN3.3X3.3-8L Package Information

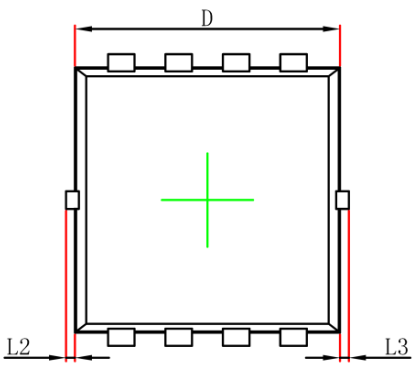

Top View
[顶视图]

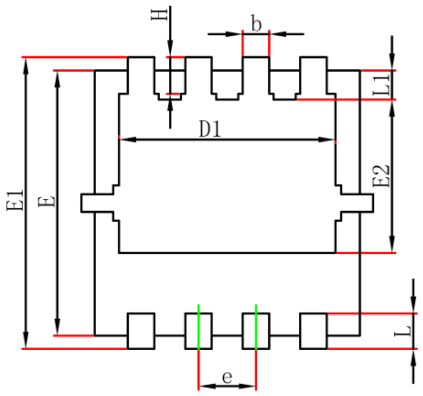

Bottom View
[背视图]

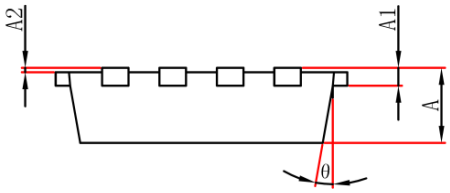

Side View
[侧视图]

Symbol	Dimensions In Millimeters		Dimensions In Inches	
	Min.	Max.	Min.	Max.
A	0.700	0.900	0.028	0.035
A1	0.10	0.25	0.004	0.010
A2	0.000	0.050	0.000	0.002
D	2.900	3.200	0.114	0.126
D1	2.300	2.600	0.091	0.102
E	2.900	3.200	0.114	0.126
E1	3.150	3.450	0.124	0.136
E2	1.535	1.935	0.060	0.076
b	0.200	0.400	0.008	0.016
e	0.550	0.750	0.022	0.030
L	0.300	0.500	0.012	0.020
L1	0.180	0.480	0.007	0.019
L2	0.000	0.100	0.000	0.004
L3	0.000	0.100	0.000	0.004
H	0.315	0.515	0.012	0.020
θ	0°	12°	0°	12°

Attention：

- GreenPower Electronics reserves the right to improve product design function and reliability without notice.
- Any and all semiconductor products have certain probability to fail or malfunction, which may result in personal injury, death or property damage. Customer are solely responsible for providing adequate safe measures when design their systems.
- GreenPower Electronics products belong to consumer electronics or other civilian electronic products.